SPACECOM CCTV LENSES

JF16DC

16mm 1:1.4

Image Size: 2/3 1/2 1/3

[SPECIFICATIONS]

Focal Length :	16mm	Flange Back :	17.526mm (In Air)
Maximum Relative Aperture :	1:1.4	Operation Voltage :	Close to Open : Less than 3V Open to Close : More than 0.5V
Iris :	F1.4 - Equivalent to 360	Operation :	Focus : Manual Iris : IG (Auto Close System)
Angular Field of View :	30.75X23.31 deg	Operation Temperature :	-10 to 50 ℃
Image Format :	8.8X6.6mm (D11mm)	Mount :	C-Mount (Adjustable Lens Position) CS-C Adaptor is necessary when used with CS Mount camera
Minimum Object Distance :	0.4m (From Front Vertex)	Front Thread :	43mm P0.75
Object Dimensions at M.O.D. :	22.7X17.0cm	Size, Weight :	59.5X50X38.9mm, Approx. 65g
Optical Back Focal Distance :	14.2mm (In Air)		

[COMPOSITION]

Lens 1
Lens Cap 1
Dust Cap 1

[DIMENSIONS]

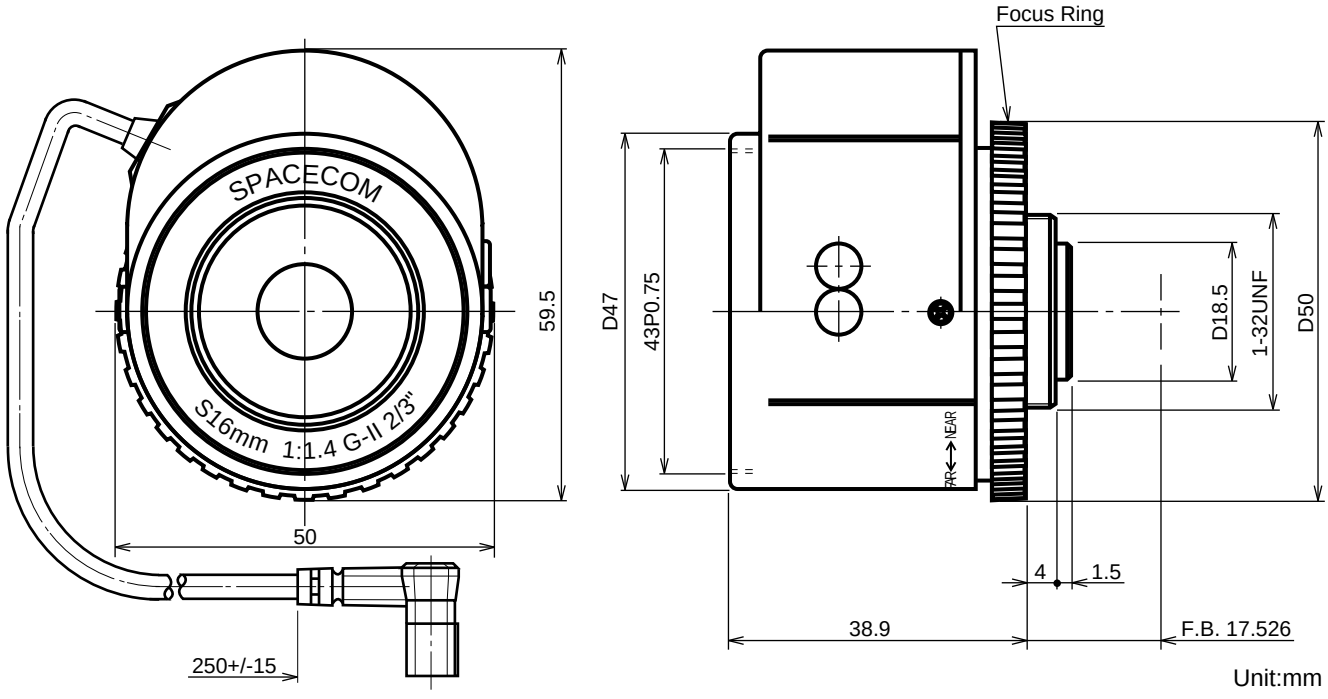

[CIRCUIT DIAGRAM]

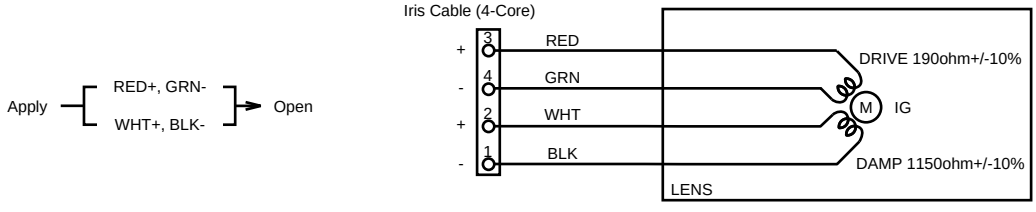

SUBJECT TO CHANGE WITHOUT NOTICE.